This international standard was developed in accordance with internationally recognized principles on standardization established in the Decision on Principles for the Development of International Standards, Guides and Recommendations issued by the World Trade Organization Technical Barriers to Trade (TBT) Committee.

Designation: A775/A775M – 17

Standard Specification for Epoxy-Coated Steel Reinforcing Bars[1]

This standard is issued under the fixed designation A775/A775M; the number immediately following the designation indicates the year of original adoption or, in the case of revision, the year of last revision. A number in parentheses indicates the year of last reapproval. A superscript epsilon (ε) indicates an editorial change since the last revision or reapproval.

This standard has been approved for use by agencies of the U.S. Department of Defense.

1. Scope*

1.1 This specification covers deformed and plain steel reinforcing bars with protective epoxy coating applied by the electrostatic spray method.

NOTE 1—The coating applicator is identified throughout this specification as the manufacturer.

1.2 Other organic coatings may be used provided they meet the requirements of this specification.

1.3 Requirements for coatings are contained in Annex A1.

1.4 Requirements for patching material are contained in Annex A2.

1.5 Guidelines for construction practices at the job-site are presented in Appendix X1.

1.6 This specification is applicable for orders in either SI units (as Specification A775M) or inch-pound units [as Specification A775].

1.7 The values stated in either SI units or inch-pound units are to be regarded separately as standard. The values stated in each system may not be exact equivalents; therefore, each system shall be used independently of the other. Combining values from the two systems may result in non-conformance with the standard.

1.8 *This standard does not purport to address all of the safety concerns, if any, associated with its use. It is the responsibility of the user of this standard to establish appropriate safety, health and environmental practices and determine the applicability of regulatory limitations prior to use.*

1.9 *This international standard was developed in accordance with internationally recognized principles on standardization established in the Decision on Principles for the Development of International Standards, Guides and Recommendations issued by the World Trade Organization Technical Barriers to Trade (TBT) Committee.*

2. Referenced Documents

2.1 *ASTM Standards:*[2]

A615/A615M Specification for Deformed and Plain Carbon-Steel Bars for Concrete Reinforcement

A706/A706M Specification for Deformed and Plain Low-Alloy Steel Bars for Concrete Reinforcement

A944 Test Method for Comparing Bond Strength of Steel Reinforcing Bars to Concrete Using Beam-End Specimens

A996/A996M Specification for Rail-Steel and Axle-Steel Deformed Bars for Concrete Reinforcement

B117 Practice for Operating Salt Spray (Fog) Apparatus

D374 Test Methods for Thickness of Solid Electrical Insulation (Metric) D0374_D0374M

D2967 Test Method for Corner Coverage of Powder Coatings

D4060 Test Method for Abrasion Resistance of Organic Coatings by the Taber Abraser

G8 Test Methods for Cathodic Disbonding of Pipeline Coatings

G14 Test Method for Impact Resistance of Pipeline Coatings (Falling Weight Test)

G20 Test Method for Chemical Resistance of Pipeline Coatings

G62 Test Methods for Holiday Detection in Pipeline Coatings

2.2 *NACE Standards:*[3]

RP-287-87 Field Measurement of Surface Profile of Abrasive Blast-Cleaned Steel Surface Using a Replica Tape

2.3 *SSPC Specifications:*[4]

SSPC-PA 2 Measurement of Dry Coating Thickness with Magnetic Gages

SSPC-SP 10 Near-White Blast Cleaning

SSPC-VIS 1 Pictorial Surface Preparation Standards for

[1] This specification is under the jurisdiction of ASTM Committee A01 on Steel, Stainless Steel and Related Alloys and is the direct responsibility of Subcommittee A01.05 on Steel Reinforcement.

Current edition approved Jan. 1, 2017. Published January 2017. Originally approved in 1981. Last previous edition approved in 2016 as A775/A775M – 16. DOI: 10.1520/A0775_A0775M-17.

[2] For referenced ASTM standards, visit the ASTM website, www.astm.org, or contact ASTM Customer Service at service@astm.org. For *Annual Book of ASTM Standards* volume information, refer to the standard's Document Summary page on the ASTM website.

[3] Available from NACE International (NACE), 1440 South Creek Dr., Houston, TX 77084-4906, http://www.nace.org.

[4] Available from Society for Protective Coatings (SSPC), 40 24th St., 6th Floor, Pittsburgh, PA 15222-4656, http://www.sspc.org.

***A Summary of Changes section appears at the end of this standard**

Copyright © ASTM International, 100 Barr Harbor Drive, PO Box C700, West Conshohocken, PA 19428-2959, United States

Copyright by ASTM Int'l (all rights reserved); Tue Sep 11 06:44:05 EDT 2018
Downloaded/printed by
OHIO STATE DEPT. OF TRANSPORTATION (OHIO STATE DEPT. OF TRANSPORTATION) pursuant to License Agreement. No further reproductions authorized.

Painting Steel Surfaces

2.4 *CRSI Documents:*[5]

"Voluntary Certification Program for Fusion Bonded Epoxy Coating Applicator Plants"

2.5 *ACI Standards:*[6]

ACI 301 Specifications for Structural Concrete

3. Terminology

3.1 *Definitions of Terms Specific to This Standard:*

3.1.1 *conversion coating, n*—preparation of the blast-cleaned steel surface prior to coating application that is designed to pretreat the metal to promote coating adhesion, reduce metal-coating reactions, improve corrosion resistance, and increase blister resistance.

3.1.2 *disbonding, n*—loss of adhesion between the fusion-bonded epoxy coating and the steel reinforcing bar.

3.1.3 *fusion-bonded epoxy coating, n*—product containing pigments, thermosetting epoxy resins, crosslinking agents, and other additives, which is applied in the form of a powder onto a clean, heated metallic substrate and fuses to form a continuous barrier coating.

3.1.4 *holiday, n*—discontinuity in a coating that is not discernible to a person with normal or corrected vision.

3.1.5 *patching material, n*—liquid two-part epoxy coating used to repair damaged or uncoated areas.

3.1.6 *wetting agent, n*—material that lowers the surface tension of water allowing it to penetrate more effectively into small discontinuities in the coating giving a more accurate indication of the holiday count.

4. Ordering Information

4.1 It shall be the responsibility of the purchaser to specify all requirements that are necessary for the coated steel reinforcing bars under this specification. Such requirements to be considered include, but are not limited to, the following:

4.1.1 Reinforcing bar specification and year of issue,

4.1.2 Quantity of bars,

4.1.3 Size and grade of bars,

4.1.4 Requirements for the powder coating and provision of test data (5.2 and 5.3),

4.1.5 Requirements for patching material (5.4.2),

4.1.6 Quantity of patching material,

4.1.7 Specific requirements for test frequency (9.1),

4.1.8 Whether a report on tests performed on the coated steel reinforcing bars being furnished is required (14),

4.1.9 Requirements for inspection (12.1), and

4.1.10 Manufacturer qualification and certification requirements (if any).

NOTE 2—It is recommended that the coating application procedures and processes be audited by an independent certification program for epoxy coating applicator plants such as that provided by the Concrete Reinforcing Steel Institute, or equivalent.

NOTE 3—A typical ordering description is as follows: Deformed Grade 420 bars to ASTM A615M_____; 6000 m, No. 19, 12 m long in secured lifts with sufficient spacers or padding, or both; epoxy-coated to ASTM A775M–_____; including written certifications for the powder coating and coated bars, and 1 L of patching material.

[Deformed Grade 60 bars to ASTM A615M–_____; 20 000 ft, No. 6, 40 ft 0 in. long in secured lifts with sufficient spacers or padding, or both; epoxy-coated to ASTM A775–_____; including written certifications for the powder coating and coated bars, and 1 qt of patching material.]

5. Materials

5.1 Steel reinforcing bars to be coated shall meet the requirements of one of the following specifications: A615M, A706M, or A996M [A615, A706, or A996], as specified by the purchaser and shall be free of contaminants such as oil, grease, or paint.

NOTE 4—Prior to coating, the steel reinforcing bars should be inspected for their suitability for coating. Bars with sharp edges on the deformations, rolled-in slivers, or other surface imperfections are difficult to coat properly and should not be coated. The coating will flow away from the sharp edges and may result in inadequate coating thickness at these points.

5.2 The powder coating shall meet the requirements of Annex A1. Upon request, the purchaser shall be provided with the test report for review.

5.2.1 A written certification shall be furnished to the purchaser that properly identifies the number of each lot of powder coating used in the order, material quantity represented, date of manufacture, name and address of the powder coating manufacturer, and a statement that the supplied powder coating is the same composition as that qualified according to Annex A1 of this specification.

5.2.2 The powder coating shall be stored in a temperature-controlled environment following the written recommendations of the powder coating manufacturer until ready for use. At that point, if the storage temperature is below the plant ambient temperature, the powder coating shall be given sufficient time to reach approximate plant ambient temperature. The powder coating shall be used within the powder coating manufacturer's written recommended shelf life.

5.3 If specified in the order, a representative 0.2-kg [8-oz] sample of the powder coating shall be supplied to the purchaser from each batch. The sample shall be packaged in an airtight container and identified by batch number.

5.4 Patching material for repairing damaged coating shall be compatible with the coating, inert in concrete, and feasible for repairs at the applicator plant or at the fabricating shop. Patching material shall be approved in accordance with Annex A2 prior to use.

5.4.1 The patching material manufacturer shall specify the metals surface preparation, and the procedures for application of the patching material.

5.4.2 If specified in the order, patching material conforming to Annex A2 and recommended by the powder coating manufacturer shall be supplied to the purchaser.

6. Surface Preparation

6.1 The surface of the steel reinforcing bars to be coated shall be cleaned by abrasive blast cleaning to near-white metal in accordance with SSPC-SP 10. Additional surface treatment, as indicated in 6.3, is permitted. Use of SSPC-VIS 1 as a visual

[5] Available from Concrete Reinforcing Steel Institute (CRSI), 933 North Plum Grove Rd., Schaumburg, IL 60173–4758, http://www.crsi.org.

[6] Available from American Concrete Institute (ACI), P.O. Box 9094, Farmington Hills, MI 48333-9094, http://www.concrete.org.

Copyright by ASTM Int'l (all rights reserved); Tue Sep 11 06:44:05 EDT 2018
Downloaded/printed by
OHIO STATE DEPT. OF TRANSPORTATION (OHIO STATE DEPT. OF TRANSPORTATION) pursuant to License Agreement. No further reproductions authorized.

standard of comparison to define the final surface condition is permitted. Average blast profile maximum roughness depth readings of 0.04 to 0.10 mm [1.5 to 4.0 mils], as determined by replica tape measurements using NACE RP-287-87, shall be considered suitable as an anchor pattern.

NOTE 5—The use of a "profilometer" type surface measurement instrument that measures the peak count as well as the maximum profile depth is recommended.

NOTE 6—Abrasive blast cleaning of steel reinforcing bars with a high degree (>90 %) of grit in the cleaning media provides the most suitable anchor profile for coating adhesion. After grit has been recycled, a small portion will take on the appearance of shot.

6.2 Multidirectional, high-pressure dry air knives shall be used after blasting to remove dust, grit, and other foreign matter from the blast-cleaned steel surface. The air knives shall not deposit oil on the steel reinforcing bars.

NOTE 7—It is recommended that incoming steel reinforcing bars and blast media be checked for salt contamination prior to use. Blast media found to be salt contaminated should be rejected. Steel reinforcing bars found to be salt contaminated from exposure to deicing salts or salt spray should be cleaned by acid washing or other suitable methods to remove salt contaminants from the surface prior to blast cleaning.

6.3 It shall be permissible for the manufacturer to use a chemical wash or conversion of the blast-cleaned steel reinforcing bar surface, or both, to enhance coating adhesion. This pretreatment shall be applied after abrasive cleaning and before coating, in accordance with the written application instructions specified by the pretreatment manufacturer.

7. Coating Application

7.1 If pretreatment is used in the preparation of the surface, the powder coating shall be applied to the cleaned and pretreated steel reinforcing bar surface as soon as possible after surface treatments have been completed, and before visible oxidation of the surface occurs as discernible to a person with normal or corrected vision. In no case shall application of the coating be delayed more than 3 h after cleaning.

7.2 The fusion-bonded epoxy powder coating shall be applied in accordance with the written recommendations of the manufacturer of the powder coating for initial steel surface temperature range and post application curing requirements. During continuous operations, the temperature of the surface immediately prior to coating shall be measured using infrared guns or temperature indicating crayons, or both, at least once every 30 min.

NOTE 8—The use of infrared and temperature-indicating crayon measurement of the steel reinforcing bars is recommended.

7.3 The powder coating shall be applied by electrostatic spray or other suitable method.

8. Requirements for Coated Steel Reinforcing Bars

8.1 *Coating Thickness:*

8.1.1 The coating thickness measurements after curing shall be 175 to 300 µm [7 to 12 mils] for bars sizes Nos. 10 to 16 [Nos. 3 to 5] and 175 to 400 µm [7 to 16 mils] for bar sizes Nos. 19 to 57 [Nos. 6 to 18]. The upper thickness limit shall not apply to repaired areas of damaged coating.

8.1.2 A single recorded steel reinforcing bar coating thickness measurement is the average of three individual gage readings obtained between four consecutive deformations. A minimum of five recorded measurements shall be taken approximately evenly spaced along each side of the test specimens (a minimum of ten recorded measurements per bar).

8.1.3 For acceptance purposes, the average of all recorded coating thickness measurements shall not be less than the specified minimum thickness or more than the specified maximum thickness. No single recorded coating thickness measurement shall be less than 80 % of the specified minimum thickness or more than 120 % of the specified maximum thickness.

8.1.4 Measurements shall be made in accordance with SSPC-PA 2, following the instructions for calibration and use recommended by the thickness gage manufacturer. Pull-off or fixed probe gages shall be used. "Pencil-type" pull-off gages that require the operator to observe the reading at the instant the magnet is pulled from the surface shall not be used.

8.1.5 The coating thickness shall be measured on the body of a straight length of steel reinforcing bar between the deformations.

8.2 *Coating Continuity:*

8.2.1 The manufacturer's plant shall have an operational in-line 67.5 V, 80 000 Ω, wet-sponge type direct-current holiday detector or equivalent method with an automated holiday counting system to determine the acceptability of the steel reinforcing bars prior to shipment.

NOTE 9—Handheld holiday detector checks should be performed each production day to verify the accuracy of the in-line system. Handheld holiday detectors offer a reliable way to correlate data obtained from the in-line holiday-detection system.

8.2.2 On average, there shall not be more than 3 holidays per metre [one holiday per foot] on a coated steel reinforcing bar. The average applies to the full production length of a bar.

8.2.3 A wetting agent shall be used in accordance with Test Methods G62 in the inspection for holidays on the coated steel reinforcing bars.

8.3 *Coating Flexibility:*

8.3.1 The coating flexibility shall be evaluated by bending production coated steel reinforcing bars at a uniform rate around a mandrel of specified size within a maximum specified time period as prescribed in Table 1. The two longitudinal ribs shall be placed in a plane perpendicular to the mandrel radius. The test specimens shall be between 20 and 30°C [68 and 86°F].

8.3.2 Cracking or disbonding of the coating on the outside radius of the bent bar visible to a person with normal or corrected vision shall be considered cause for rejection of the coated steel reinforcing bars represented by the bend test sample.

NOTE 10—The qualification requirements for coating flexibility (see A1.3.5.1) prescribe bending a No. 19 [No. 6] deformed bar around a 150-mm [6-in.] diameter mandrel. The bend test requirements in Table 1 for evaluating the coating flexibility of production-coated steel reinforcing bars, for bar sizes Nos. 10 to 25 [Nos. 3 to 8], are not compatible with fabrication bending practices. Finished bend diameters for bar sizes Nos. 10 to 25 [Nos. 3 to 8] used in actual construction are smaller than the

Copyright by ASTM Int'l (all rights reserved); Tue Sep 11 06:44:05 EDT 2018
Downloaded/printed by
OHIO STATE DEPT. OF TRANSPORTATION (OHIO STATE DEPT. OF TRANSPORTATION) pursuant to License Agreement. No further reproductions authorized.

TABLE 1 Bend Test Requirements

A615M, A706M, or A996M		A615, A706, or A996			
Bar No.	Mandrel Diameter, mm[A]	Bar No.	Mandrel Diameter, in.[A]	Bend Angle (After Rebound, degrees)	Time to Comple-tion max, s
10	75	3	3	180	15
13	100	4	4	180	15
16	125	5	5	180	15
19	150	6	6	180	15
22	175	7	7	180	45
25	200	8	8	180	45
29	230	9	9	180	45
32	250	10	10	180	45
36	280	11	11	180	45
43	430	14	17	90	45
57	580	18	23	90	45

[A] Mandrel diameters specified for similar size (shown on the same line) metric and inch-pound bars may be interchanged.

mandrel diameters in Table 1. Thus, the finished bends of production-coated bars, particularly the smaller bar sizes used for stirrups and ties, should be examined closely for hairline cracking on the outside radius of the bent bar. If hairline cracking is present, it should be repaired with patching material.

8.3.3 A test in which fracture or partial failure of the steel reinforcing bar, or cracking or disbonding caused by imperfections in the bar surface visible after performing the bend test occurs, shall be considered an invalid test and the test shall be repeated on a new specimen.

8.4 The requirements for coated steel reinforcing bars shall be met at the manufacturer's plant prior to shipment.

9. Number of Tests

9.1 The purchaser shall have the option to specify the sampling and test schedule for the number and frequency of tests for coating thickness, continuity, and flexibility.

9.2 If the number and frequency of tests are not specified by the purchaser the following apply:

9.2.1 Tests for coating thickness shall be made on a minimum of two bars of each size every two production hours,

9.2.2 Bend tests for coating flexibility shall be conducted on at least one bar of each size every four production hours, and

9.2.3 Random tests shall be made for coating continuity.

10. Retests

10.1 If the specimen for coating thickness or flexibility fails to meet the specified requirements, two retests on random samples shall be conducted for each failed test. If the results of both retests meet the specified requirements, the coated steel reinforcing bars represented by the samples shall be accepted.

11. Permissible Amount of Damaged Coating and Repair of Damaged Coating

11.1 The maximum amount of repaired damaged coating shall not exceed 1 % of the total surface area in each 0.3 m [1-ft] of the bar. This limit on repaired damaged coating shall not include sheared or cut ends that are coated with patching material (see 11.4).

11.2 All damaged coating due to fabrication and handling (to the point of shipment to the job-site) shall be repaired with patching material conforming to Annex A2.

NOTE 11—If the amount of repaired damaged coating in any 0.3-m [1-ft] length of a coated bar, exceeds 1 %, that section should be removed from the coated steel reinforcing bar and discarded. In patching damaged coating , care should be taken not to apply the patching material over an excessive area of the intact coating during the repair process. Too large an area of thick patching material especially on smaller-size reinforcing bars is likely to cause a reduction in bond strength of the bars to concrete.

11.3 Repaired areas shall have a minimum coating thickness of 175 μm [7 mils].

11.4 When coated bars are sheared, saw-cut, or cut by other means during the fabrication process, the cut ends shall be coated with patching material. Coated steel reinforcing bars shall not be flame cut.

11.5 Repair of damaged coating shall be performed in accordance with the patching material manufacturer's written recommendations.

12. Inspection

12.1 Inspection of the epoxy-coated steel reinforcing bars shall be agreed upon between the purchaser and the manufacturer as part of the purchase order or contract.

13. Rejection

13.1 Coated steel reinforcing bars represented by test specimens that do not meet the requirements of this specification shall be rejected and marked with a contrasting color paint or other suitable identification. At the manufacturer's option, the affected lot shall be replaced or, alternatively, stripped of coating, recleaned, recoated, and resubmitted for acceptance testing in accordance with the requirements of this specification.

NOTE 12—If the coating is not to be stripped from the rejected steel reinforcing bars, the bars should be scrapped or with the purchaser's approval used as uncoated steel reinforcing bars.

14. Certification

14.1 The purchaser shall be furnished with, at the time of shipment, written certification that samples representing each lot of coated steel reinforcing bars have been either tested or inspected as directed in this specification and the requirements have been met. When specified in the purchase order or contract, a report of the test results shall be furnished.

14.2 A Material Test Report, Certificate of Inspection, or similar document printed from or used in electronic form from an electronic data interchange (EDI) transmission shall be regarded as having the same validity as a counterpart printed in the certifier's facility. The content of the EDI transmitted document must meet the requirements of the invoked ASTM standard(s) and conform to any EDI agreement between the purchaser and the supplier. Notwithstanding the absence of a signature, the organization submitting the EDI transmission is responsible for the content of the report.

NOTE 13—The industry definition invoked here is: EDI is the computer to computer exchange of business information in a standard format such as ANSI ASC X12.

Copyright by ASTM Int'l (all rights reserved); Tue Sep 11 06:44:05 EDT 2018
Downloaded/printed by
OHIO STATE DEPT. OF TRANSPORTATION (OHIO STATE DEPT. OF TRANSPORTATION) pursuant to License Agreement. No further reproductions authorized.

15. Handling and Identification

15.1 All systems for handling coated steel reinforcing bars shall have padded contact areas. All bundling bands shall be padded or suitable banding shall be used to prevent damage to the coating. All bundles of coated steel reinforcing bars shall be lifted with a strong back, spreader bar, multiple supports, or a platform bridge to prevent bar-to-bar abrasion from sags in the bundles of coated steel reinforcing bars. The bars or bundles shall not be dropped or dragged.

15.2 If circumstances require storing coated steel reinforcing bars outdoors for more than two months, protective storage measures shall be implemented to protect the material from sunlight, salt spray and weather exposure. If the manufacturer stores coated steel reinforcing bars outdoors without protective covering, the date on which the coated bars are placed outdoors shall be recorded on the identification tag on the bundled steel. Coated steel reinforcing bars, whether individual bars or bundles of bars, or both, shall be covered with opaque polyethylene sheeting or other suitable opaque protective material. For stacked bundles, the protective covering shall be draped around the perimeter of the stack. The covering shall be secured adequately, and allow for air circulation around the bars to minimize condensation under the covering.

15.3 Coated steel reinforcing bars, whether individual bars or bundles of bars, or both, shall be stored off the ground on protective cribbing.

15.4 The identification of all steel reinforcing bars shall be maintained throughout the coating and fabrication processes to the point of shipment.

16. Keywords

16.1 coating requirements; concrete reinforcement; corrosion resistance; epoxy coating; steel bars

ANNEXES

(Mandatory Information)

A1. REQUIREMENTS FOR ORGANIC COATINGS FOR STEEL REINFORCING BARS

A1.1 Powder Coatings

A1.1.1 This annex covers qualification requirements for barrier organic coatings for protecting steel reinforcing bars from corrosion.

A1.1.2 The powder coating shall be of organic composition except for the pigment which may be inorganic if used.

A1.2 Test Materials

A1.2.1 A 0.5-kg [1-lb] sample of the powder coating with its generic description and fingerprint (including the method such as infrared spectroscopy or thermal analysis) shall be submitted to the testing agency. The fingerprint and generic description shall become an integral part of the qualification test report.

A1.2.2 A sample of patching material conforming to Annex A2 shall be submitted to the testing agency. The product name and a description of the patching material shall be given in the test report.

A1.2.3 *Test Specimens:*

A1.2.3.1 The following specimens shall be submitted as a minimum for test:

(1) Fourteen 1.2-m [4-ft] long No. 19, Grade 420 [No. 6, Grade 60] deformed steel reinforcing bars, with a coating thickness of 175 to 300 µm [7 to 12 mils],

(2) Six uncoated and uncleaned No. 19 [No. 6] steel reinforcing bars, 1.2-m [4-ft] long, and from the same lot of steel as the coated bars,

(3) Four 100 mm by 100 mm by 1.3 mm [4 in. by 4 in. by 0.05 in.] steel plates with center holes for Taber abrasers coated to a thickness of 250 ± 50 µm [10 ± 2 mils].

(4) Four free films of coating material with a thickness of 175 to 225 µm [7 to 9 mils]. The films shall be at least 100 mm by 100 mm [4 in. by 4 in.].

(5) Fourteen coated No. 19 [No. 6] steel reinforcing bars, 0.25-m [10-in.] long, coated to a thickness of 175 to 300 µm [7 to 12 mils]. The coated steel reinforcing bars shall have their ends sealed with patching material.

A1.2.3.2 Steel reinforcing bars with a nominal diameter within ±1 mm [0.04 in.] of No. 19 [No. 6] bars shall be acceptable for qualification testing.

A1.2.3.3 The coating on the bars and films tested shall be free of holes, voids, contamination, cracks and damaged areas. The coated bars shall be checked for holidays using a 67.5-V, 80 000-Ω, wet-sponge type dc holiday detector in accordance with Test Methods G62. The total number of holidays found on the bar specimens tested shall be reported.

A1.2.3.4 Coating thickness measurements shall be made in accordance with 8.1.

A1.2.3.5 The manufacturer shall specify the method and grade of metal surface preparation and the coating application procedures for the test specimens and for contract production of coated steel reinforcing bars. These procedures shall be listed in the test report.

NOTE A1.1—Production-coated steel reinforcing bars will be required to be manufactured in the same manner as the qualification bars. Therefore, it is necessary that the qualification bars be prepared in the

Copyright by ASTM Int'l (all rights reserved); Tue Sep 11 06:44:05 EDT 2018
Downloaded/printed by
OHIO STATE DEPT. OF TRANSPORTATION (OHIO STATE DEPT. OF TRANSPORTATION) pursuant to License Agreement. No further reproductions authorized.

manner proposed for production. Variations in the critical preparation, thermal treatment, and coating procedures known to be allowable without a compromise in quality should also be detailed in the qualification report.

A1.3 Coating Requirements

A1.3.1 *Chemical Resistance*—The chemical resistance of the coating shall be evaluated in accordance with Test Method G20 by immersing coated steel reinforcing bars in each of the following: distilled water, a 3 *M* aqueous solution of $CaCl_2$, a 3 *M* aqueous solution of NaOH, and a solution saturated with $Ca(OH)_2$. Specimens without holidays and specimens with intentional holes drilled through the coating 6 mm [0.25 in.] in diameter shall be tested. The temperature of the test solutions shall be 24 ± 2°C [75 ± 3.6°F]. Minimum test time shall be 45 days. The coating must not blister, soften, lose bond, nor develop holidays during this period. The coating surrounding the intentionally made holes shall exhibit no undercutting during the 45-day period.

A1.3.2 *Cathodic Disbondment*—Test Method G8 shall be followed except:

A1.3.2.1 The cathode shall be a 250-mm [10-in.] long coated steel reinforcing bar;

A1.3.2.2 The anode shall be a 150-mm [6-in.] long solid platinum electrode (1.6 mm [0.06 in.] nominal diameter) or platinized wire (3.2 mm [0.125 in.] nominal diameter);

A1.3.2.3 A calomel reference electrode shall be used;

A1.3.2.4 The electrolyte solution shall be 3 % NaCl by mass dissolved in distilled water;

A1.3.2.5 The electrolyte solution temperature shall be 24 ± 2°C [75 ± 3.6°F];

A1.3.2.6 The drilled coating defect shall be 3 mm [0.12 in.] in diameter;

A1.3.2.7 A potential of −1.5 V measured against the calomel reference electrode shall be applied and a 10-Ω shunt resistor used; and

A1.3.2.8 The test duration shall be 168 h.

A1.3.2.9 Fig. A1.1 presents the recommended equipment configuration for performing cathodic disbondment testing on straight steel reinforcing bars. The intentional coating defect shall be placed approximately 50 mm [2 in.] from the sealed end of the test bar centered between the longitudinal and transverse ribs. It shall be drilled just deep enough to expose a full 3 mm [0.12 in.] diameter in the steel. The test bar shall be inserted with the sealed end of the bar resting on the bottom of the test vessel and electrolyte added until 100 mm [4 in] of the bar length is submerged.

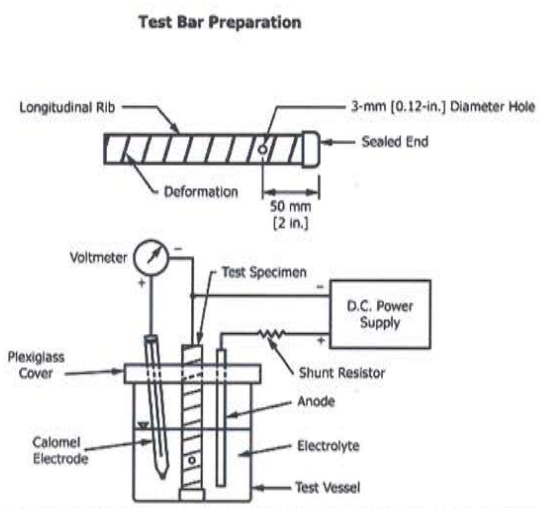

FIG. A1.1 Cathodic Disbondment Test Equipment Configuration

A1.3.2.10 The tested bars shall be allowed to cool for approximately 1 ± 0.25 h prior to evaluation. Four measurements shall be taken at 0°, 90°, 180°, and 270° and the values averaged. The average coating disbondment radius of three coated steel reinforcing bars shall not exceed 4 mm [0.16 in.] when measured from the edge of the intentional coating defect.

A1.3.3 *Salt Spray Resistance*—The resistance of the coating to a hot, wet corrosive environment shall be evaluated in accordance with Practice B117 by exposing 250 mm [10 in.] long coated steel reinforcing bars containing intentional defects to 35 ± 2°C [95 ± 3.6°F] salt spray comprised of 5 % NaCl by mass dissolved in distilled water for 800 ± 20 h. Three intentional 3 mm [0.12 in.] diameter defects shall be drilled through the coating of each test specimen approximately evenly spaced along one side of the bar with the holes centered between deformations. The coated steel reinforcing bars shall be placed horizontally in the cabinet with the damage sites facing the side (90°). The test specimens shall be allowed to cool for approximately 1 ± 0.25 h prior to evaluation. Four measurements shall be taken, at 0°, 90°, 180°, and 270° and the values averaged. The average coating disbondment radius of nine test sites on three coated steel reinforcing bars shall not exceed 3 mm [0.12 in.] when measured from the edge of the intentional coating defect.

A1.3.4 *Chloride Permeability*—The chloride permeability characteristics of the cured coating having a film thickness of 175–225 µm [7–9 mils] shall be measured on two test films and a control film at 24 ± 2°C [75 ± 3.6°F] for 45 days. The permeability cells shall be of the type shown in Fig. A1.2. Films selected for testing shall be carefully handled and examined for any defects prior to installation in the cell. The cell shall consist of two glass compartments separated by a coating film sandwiched between two glass plates, each having a centered 25-mm [1-in.] hole. One compartment shall contain 175 mL [5.3 oz] of 3*M* NaCl and the other 115 mL [3.5 oz] of distilled water. The activity of chloride ions passing through the film shall be measured using a specific ion meter equipped with a chloride electrode and a double junction reference electrode. Activity measurements shall be converted into concentration values of mole per L [*M*] with a conversion diagram, constructed by plotting measured chloride ion activities versus known chloride ion concentrations. The accumulative concentration of chloride ions permeating through the film shall be less than $1 \times 10^{-4} M$.

A1.3.5 *Coating Flexibility:*

A1.3.5.1 The coating flexibility shall be evaluated by bending three coated steel reinforcing bars 180° (after rebound) around a 150-mm [6-in.] diameter mandrel. The bend shall be

Copyright by ASTM Int'l (all rights reserved); Tue Sep 11 06:44:05 EDT 2018
Downloaded/printed by
OHIO STATE DEPT. OF TRANSPORTATION (OHIO STATE DEPT. OF TRANSPORTATION) pursuant to License Agreement. No further reproductions authorized.

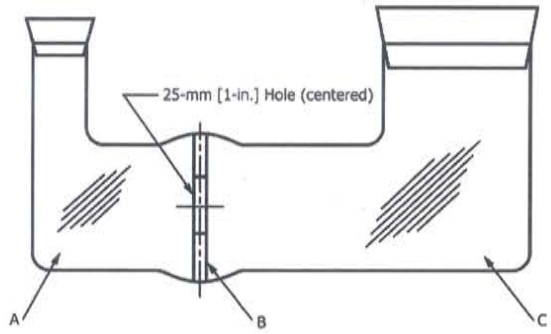

Permeability Cell Components:
A. Component containing distilled water
B. Epoxy film sandwich between two glass plates each having a centered 25-mm [1-in.] diameter hole
C. Component containing 3M NaCl

FIG. A1.2 Chloride Permeability Test Equipment Configuration

made at a uniform rate and completed within a 15-s time period. The two longitudinal ribs shall be placed in a plane perpendicular to the mandrel radius and the specimen shall be at 24 ± 2°C [75 ± 3.6°F].

A1.3.5.2 No cracking of the coating shall be visible to a person with normal or corrected vision on the outside radius of any of the three bent bars.

A1.3.5.3 A test in which fracture or partial failure of the steel reinforcing bar, or cracking or disbonding caused by imperfections in the bar surface visible after performing the bend test occurs, shall be considered an invalid test and the test shall be repeated on a new specimen.

A1.3.6 *Relative Bond Strength in Concrete*—The relative bond strength of the steel reinforcing bars to concrete shall be determined with beam-end specimens by the method described in Test Method A944 using No. 19 [No. 6] steel reinforcing bars with a relative rib area (ratio of projected rib area normal to the bar axis to the product of the nominal bar perimeter and the center-to-center rib spacing) between 0.075 and 0.085. The bars shall be bottom-cast and shall have a cover of 40 ± 2 mm [1.5 ± 0.06 in.], a lead length of 13 ± 3 mm [0.5 ± 0.12 in.], and a bonded length of 250 ± 5 mm [10 ± 0.25 in.]. Test bars shall be oriented so that the longitudinal ribs and direction of rolling, relative to the direction of the applied tension, are the same for coated and uncoated bars. The test bars must be pulled in the same direction with respect to the direction of rolling. Three to six coated bar specimens and three to six uncoated bar specimens shall be tested. All steel reinforcing bars in a test group shall be from the same steel heat. The uncoated bars shall be cleaned only by lightly wiping with acetone or other suitable solvent. The mean bond strength of the coated bars shall not be less than 85 % of the mean bond strength of the uncoated bars.

A1.3.7 *Abrasion Resistance*—The resistance of the coating on each of three steel panels to abrasion by a Taber abraser (Test Method D4060) or its equivalent, using CS-10 wheels and a 1-kg [2.2-lb] load per wheel, shall be such that the weight loss shall not exceed 100 mg [0.0035 oz]/1000 cycles.

A1.3.8 *Impact Test*—The resistance of the steel reinforcing bar coating to mechanical damage shall be determined by the falling weight test. A test apparatus similar to that described in Test Method G14 shall be used along with a 1.8-kg [4-lb] tup having a nose diameter of 16 mm [0.63 in.]. Impact shall occur on the low-lying areas on the coated steel reinforcing bars, that is, between deformations or ribs. The test shall be performed at 24 ± 2°C [75 ± 3.6°F]. With an impact of 9 Nm [80 in.·lbf], no shattering, cracking, or bond loss of the coating shall occur except at the impact area, that is, the area permanently deformed by the tup.

A1.4 Qualification Testing

A1.4.1 *Testing Agency*—Qualification tests shall be performed by an agency acceptable to the purchaser.

A1.5 Certification

A1.5.1 A report summarizing the results of all tests and bearing the signature of the testing laboratory shall be furnished to the manufacturer.

A2. REQUIREMENTS FOR PATCHING MATERIAL USED TO REPAIR ORGANIC COATINGS FOR STEEL REINFORCING BARS

A2.1 Scope

A2.1.1 This annex covers qualification requirements for patching materials that are used to repair barrier organic coatings such as epoxy coatings.

A2.2 Coating Patching Material

A2.2.1 The coating patching material shall be of organic composition except for the pigment and fillers which may be inorganic if used.

A2.2.2 A minimum of 0.95 L [1 qt] of patching material, compatible with the coating and inert in concrete, shall be submitted to the testing agency. The material shall be feasible for repairing damaged epoxy coating. The product name and a description of the patching material shall be given in the test report. A complete list of powder coating materials (product names and manufacturers), for which the patching material has been approved for use, shall be provided and included in the qualification test report.

Copyright by ASTM Int'l (all rights reserved); Tue Sep 11 06:44:05 EDT 2018
Downloaded/printed by
OHIO STATE DEPT. OF TRANSPORTATION (OHIO STATE DEPT. OF TRANSPORTATION) pursuant to License Agreement. No further reproductions authorized.

A2.3 Test Specimens

A2.3.1 The following test specimens shall be submitted as a minimum for test:

A2.3.1.1 Four free films of coating patching material with a thickness within ±25 µm [±1 mil] of the patching material manufacturer's minimum recommended patching material coating application thickness.

A2.3.1.2 Six 75 by 150 mm [3 by 6 in.] by 3 mm [⅛ in.] flat panels that have been blast-cleaned and coated on both sides with 175 to 300 µm [7 to 12 mils] of epoxy powder coating in accordance with the powder coating manufacturer's written instructions. The hanger marks on the panels shall be sealed with silicone or other suitable sealant.

A2.3.2 A description of the sample preparation process for the free films and flat panel samples (for example, the number of coats of patching material applied to the intentional coating defect to achieve the minimum required coating thickness), used in this prequalification evaluation shall be provided in the test report. The patching material manufacturer shall specify the minimum patching material coating application thickness to be used. In addition, the patching material manufacturer shall specify the method of metal surface preparation and the procedures for application of the patching material. These procedures shall be followed by the testing agency to prepare the coated metal specimens for test and shall be listed in the qualification test report.

A2.4 Patching Material Requirements

A2.4.1 *Chloride Permeability*—The chloride permeability characteristics of the patching material shall be measured on two test films and a control film at 24 ± 2°C [75 ± 3.6°F] for 45 days. The permeability cells shall be of the type shown in Fig. A1.2. Films selected for testing shall be carefully handled and examined for any defects prior to installation in the cell. The cell shall consist of two glass compartments separated by a coating film sandwiched between two glass plates, each having a centered 25-mm [1-in.] hole. One compartment shall contain 175 mL [5.3 oz] of 3*M* NaCl and the other 115 mL [3.5 oz] of distilled water. The activity of chloride ions passing through the film shall be measured using a specific ion meter equipped with a chloride electrode and a double junction electrode. Activity measurements shall be converted into concentration values of mole per L [*M*] with a conversion diagram, constructed by plotting measured chloride ion activities versus known chloride ion concentrations. The accumulative concentration of chloride ions permeating through the film shall be less than 1×10^{-4} *M*.

A2.4.2 *Salt Spray Resistance*—The resistance of the patching material to a hot, wet corrosive environment shall be evaluated in accordance with Practice B117. Three coated 75 by 150 mm [3 by 6 in.] by 3 mm [⅛ in.] flat panels, with intentional defects repaired with the patching material, shall be exposed to 35 ± 2° C [95 ± 3.6° F] salt spray comprised of 5 % NaCl by mass dissolved in distilled water for 400 ± 10 h. Each intentional defect shall be an area of 12 by 25 mm [½ by 1 in.] removed from the center of one side of the coated panel using a grinding wheel or other suitable method. Dust and loose material shall be removed from the intentional defect site with a clean cloth after the coating's removal. The patching material shall be prepared for application in accordance with the written instructions of the patching material manufacturer. The patching material shall be applied with a new paint brush to the intentional defect to form a patched area of 25 by 37 mm [1 by 1.5 in.] fully covering the intentional defect. The coated panel shall be lying flat on a table during the patching material application and shall remain in such a position until the coating has cured according to the manufacturer's instructions. The patching operation and the patched panels shall be maintained at a temperature of 24 ± 2°C [75 ± 3.6°F]. The patched area coating thickness shall be within ±25 µm [±1 mil] of the patching material manufacturer's minimum recommended patching material coating application thickness. The patched panels shall be allowed to cure for a minimum of three days before placement in the salt spray apparatus. The patched area coating thickness shall be measured and reported. Upon examination after completion of the test, the patched areas on each of the three coated panels shall not be observed to have formed blisters nor have developed areas of rust from holes in the patch itself or from the patching material interface with the coated panel.

A2.4.3 *Chemical Resistance*—The ability of the patching material to resist blistering and corrosion in a solution that simulates concrete pore solution shall be evaluated in accordance with Test Method G20. Three coated 75 by 150 mm [3 by 6 in.] by 3 mm [⅛ in.] flat panels, with intentional defects repaired with the patching material, shall be immersed in an aqueous solution containing 0.3 *N* KOH and 0.05 *N* NaOH at 55 ± 2°C [132 ± 3.6°F] for 28 days. Each intentional defect shall be an area of 12 by 25 mm [½ by 1 in.] removed from the center of one side of the coated panel using a grinding wheel or other suitable method. Dust and loose material shall be removed from the intentional defect site with a clean cloth after the coating's removal. The patching material shall be prepared for application in accordance with the written instructions of the patching material manufacturer. The patching material shall be applied with a new paint brush to the intentional defect to form a patched area of 25 by 37 mm [1 by 1.5 in.] fully covering the intentional defect. The coated panel shall be lying flat on a table during the patching material application and shall remain in such a position until the coating has cured according to the manufacturer's instructions. The patching operation and the patched panels shall be maintained at a temperature of 24 ± 2°C [75 ± 3.6°F]. The patched area coating thickness shall be within ±25 µm [±1 mil] of the patching material manufacturer's minimum recommended patching material coating application thickness. The patched panels shall be allowed to cure for a minimum of three days before placement in the simulated concrete pore solution. The patched area coating thickness shall be measured and reported. Upon examination after completion of the test, the patched areas on each of the three coated panels shall not be observed to have formed blisters nor have developed areas of rust from holes in the patch itself or from the patching material interface with the coated panel.

Copyright by ASTM Int'l (all rights reserved); Tue Sep 11 06:44:05 EDT 2018
Downloaded/printed by
OHIO STATE DEPT. OF TRANSPORTATION (OHIO STATE DEPT. OF TRANSPORTATION) pursuant to License Agreement. No further reproductions authorized.

A2.4.4 *Edge Coverage:*

A2.4.4.1 Four precision-finished 13 by 13 by 50 mm [½ by ½ by 2 in.] steel bars, as described in Test Method D2967, Section 6.4, with edges having a radius of no more than 0.13 mm [0.005 in.] shall be prepared for the test procedure. The test pieces shall be inspected with a 10× microscope or magnifying glass prior to use to determine that all edges are of the proper sharpness and free from nicks and burrs. The test pieces shall be cleaned in a suitable solvent to remove all oil, grease and foreign matter. The test pieces shall then be air-dried.

A2.4.4.2 A 25-mm [1-in.] micrometer caliper, in accordance with Method C of Test Methods D374, or other suitable instrument, shall be used to make thickness measurements. Measure and record the distance across both diagonals of each of the four test bars to the nearest 2.5 µm [0.1 mils] at a point 38 mm [1.5 in.] from the end of the specimen to be left uncoated (the top end). Average each uncoated bar's diagonal measurements.

A2.4.4.3 Approximately 0.25 L [0.24 qt] of the patching material shall be prepared in a suitable container in accordance with the written instructions of the patching material manufacturer. The patching material shall be prepared and the test pieces shall be coated according to the application recommendation of the patching material manufacturer. After coating, the test pieces shall be cured according to the manufacturer's instructions. The patching material application operation and the patched test pieces shall be maintained at a temperature of 24 ± 2°C [75 ± 3.6°F].

A2.4.4.4 Again measure and record the distance across both diagonals of each of the four now coated test bars to the nearest 2.5 µm [0.1 mils] at the same point 38 mm [1.5 in.] from the uncoated end of the specimen.

A2.4.4.5 Average the distance measurements across the two diagonals of the coated test bars. Subtract the average diagonal measurement of each uncoated bar from that of each coated bar and divide by two to obtain the average edge thickness.

A2.4.4.6 The average of the four averaged edge coating thickness measurements from the four test specimens shall be greater than or equal to the patching material manufacturer's minimum recommended patching material coating application thickness.

A2.5 Qualification Testing

A2.5.1 *Testing Agency*—Qualification tests shall be performed by an agency acceptable to the purchaser.

A2.6 Certification

A2.6.1 A report summarizing the results of all tests and bearing the signature of the testing laboratory shall be furnished to the manufacturer.

APPENDIX

(Nonmandatory Information)

X1. GUIDELINES FOR JOB-SITE PRACTICES

X1.1 This specification is a product standard. Requirements for fusion-bonded epoxy coated steel reinforcing bars from the point of shipment to the job-site and subsequent practices at the job-site are not delineated in this product standard.

X1.2 The American Concrete Institute has published "Specifications for Structural Concrete (ACI 301)." Standard Specifications ACI 301 is intended to be used in its entirety in the project specifications. An architect-engineer may cite Standard Specifications ACI 301 in the project specifications for any cast-in-place concrete construction project. Standard Specifications ACI 301 includes provisions for epoxy-coated steel reinforcing bars.

X1.3 The project specifications should prescribe requirements for the coated steel reinforcing bars from the point of shipment to the job-site and subsequent practices at the job-site. In the absence of these requirements in the project specifications, the following guidelines for job-site practices are recommended:

X1.3.1 When handling coated steel reinforcing bars, care should be exercised to avoid bundle-to-bundle or bar-to-bar abrasion.

X1.3.2 Equipment for handling coated steel reinforcing bars should have protected contact areas.

X1.3.3 Coated steel reinforcing bars should be off-loaded as close as possible to their points of placement or under the crane so that the bars can be hoisted to the area of placement to minimize rehandling.

X1.3.4 Coated steel reinforcing bars should be stored off the ground on protective cribbing, and timbers placed between bundles when stacking is necessary. Space the supports sufficiently close to prevent sags in the bundles.

X1.3.5 Coated and uncoated steel reinforcing bars should be stored separately.

X1.3.6 Long-term storage should be minimized and work stoppages phased to suit construction progress.

X1.3.7 If circumstances require storing coated steel reinforcing bars outdoors for more than two months, protective storage measures should be implemented to protect the material from sunlight, salt spray and weather exposure. If the coated steel reinforcing bars are stored outdoors without cover, it is recommended that the date on which the coated bars are placed outdoors be recorded on the identification tag on the bundled steel. Coated steel reinforcing bars stored in corrosive environments may require protection sooner. Coated steel reinforcing bars or bundles should be covered with opaque polyethylene sheeting or other suitable opaque protective material. For stacked bundles, the protective covering should

Copyright by ASTM Int'l (all rights reserved); Tue Sep 11 06:44:05 EDT 2018
Downloaded/printed by
OHIO STATE DEPT. OF TRANSPORTATION (OHIO STATE DEPT. OF TRANSPORTATION) pursuant to License Agreement. No further reproductions authorized.

be draped around the perimeter of the stack. The covering should be secured adequately and allow for air circulation around the bars to minimize condensation under the covering.

X1.3.8 When the extent of damaged coating exceeds 2 % of the surface area of the coated steel reinforcing bar in any 0.3-m [1-ft] length, the coated bar should be rejected.

X1.3.9 When the extent of the damage does not exceed 2 % of the surface area in any 0.3-m [1-ft] length, all damaged coating discernible to a person with normal or corrected vision should be repaired with patching material.

NOTE X1.1—If the amount of repaired damaged coating in any 0.3-m [1-ft] length of a coated bar exceeds 2 %, that section should be removed from the coated steel reinforcing bar and discarded. In patching damaged coating, care should be taken not to apply the patching material over an excessive area of the intact coating during the repair process. Too large an area of thick patching material, especially on smaller-size reinforcing bars is likely to cause a reduction in bond strength of bar to concrete.

X1.3.10 Coated steel reinforcing bars should not be flame cut.

X1.3.11 Placed coated steel reinforcing bars should be inspected for damaged coating prior to placing concrete. Where damage exists, it should be repaired with patching material complying with this specification.

X1.3.12 Patching material should be applied in strict accordance with the written instructions furnished by the patching material manufacturer. Prior to application of the patching material, rust should be removed from the damaged areas by suitable means. The patching material should be allowed to cure before placing concrete over the coated steel reinforcing bars.

NOTE X1.2—Patching material should conform to Annex A2 and be recommended by the powder coating manufacturer.

X1.3.13 When placing coated steel reinforcing bars, all wire bar supports, spacers, and tying wire should be coated with dielectric material, for example, an epoxy-coated or plastic-coated material compatible with concrete.

X1.3.14 After placing, walking on coated steel reinforcing bars should be minimized. The placement of mobile equipment should be planned to avoid damage to the coated bars.

X1.3.15 When immersion-type vibrators are used to consolidate concrete around epoxy-coated steel reinforcing bars, the vibrators should be equipped with rubber or nonmetallic vibrator heads.

SUMMARY OF CHANGES

Committee A01 has identified the location of selected changes to this standard since the last issue (A775/A775M – 16) that may impact the use of this standard. (Approved Jan. 1, 2017.)

(1) Removed information on Coating Adhesion from 4.1.8, 8.4, 9.1, and 9.3, and renumbered any subsequent content as appropriate.

Committee A01 has identified the location of selected changes to this standard since the last issue (A775/A775M – 07b (2014)) that may impact the use of this standard. (Approved May 15, 2016.)

(1) Revised 4.1.9 and 12.1.

ASTM International takes no position respecting the validity of any patent rights asserted in connection with any item mentioned in this standard. Users of this standard are expressly advised that determination of the validity of any such patent rights, and the risk of infringement of such rights, are entirely their own responsibility.

This standard is subject to revision at any time by the responsible technical committee and must be reviewed every five years and if not revised, either reapproved or withdrawn. Your comments are invited either for revision of this standard or for additional standards and should be addressed to ASTM International Headquarters. Your comments will receive careful consideration at a meeting of the responsible technical committee, which you may attend. If you feel that your comments have not received a fair hearing you should make your views known to the ASTM Committee on Standards, at the address shown below.

This standard is copyrighted by ASTM International, 100 Barr Harbor Drive, PO Box C700, West Conshohocken, PA 19428-2959, United States. Individual reprints (single or multiple copies) of this standard may be obtained by contacting ASTM at the above address or at 610-832-9585 (phone), 610-832-9555 (fax), or service@astm.org (e-mail); or through the ASTM website (www.astm.org). Permission rights to photocopy the standard may also be secured from the Copyright Clearance Center, 222 Rosewood Drive, Danvers, MA 01923, Tel: (978) 646-2600; http://www.copyright.com/

Copyright by ASTM Int'l (all rights reserved); Tue Sep 11 06:44:05 EDT 2018
Downloaded/printed by
OHIO STATE DEPT. OF TRANSPORTATION (OHIO STATE DEPT. OF TRANSPORTATION) pursuant to License Agreement. No further reproductions authorized.

SHERWIN WILLIAMS.

PRO INDUSTRIAL™

113.22

WATER BASED CATALYZED EPOXY

PART A	B73-300 SERIES	GLOSS
PART A	B73-360 SERIES	EG-SHEL
PART B	B73V300	HARDENER

GREENGUARD
PRODUCT CERTIFIED FOR LOW CHEMICAL EMISSIONS
UL.COM/GG
UL 2818
GOLD

As of 02/03/2017, Complies with:			
OTC	Yes	LEED® 09 NC CI	Yes
OTC Phase II	Yes	LEED® 09 CS	Yes
SCAQMD	Yes	LEED® 09 H & S	Yes
CARB	Yes	LEED® v4 Emissions	Yes
CARB SCM 2007	Yes	LEED® v4 VOC	Yes
Canada	Yes	MPI®	Yes

CHARACTERISTICS

Pro Industrial Water Based Catalyzed Epoxy is an interior/exterior two component polyamine epoxy topcoat. Designed for use in commercial and industrial applications. It provides excellent corrosion resistance, abrasion resistance, color durability, chemical resistance, early moisture resistance and good adhesion to concrete, metal, or primed substrates. Suitable for use in USDA inspected facilities.

Color: most colors

Recommended Spread Rate per coat:

Wet mils:	5.0 - 12.0
Dry mils:	2.0 - 5.0
Coverage:	130 - 320 sq ft/gal approximate

Note: Brush or roll application may require multiple coats to achieve maximum film thickness and uniformity of appearance.

Drying Time @ 7.0 mils wet 50% RH:

	50°F	77°F	100°F
To touch:	1 hrs	45 min	25 min
To handle:	5 hrs	4 hrs	2 hrs
To recoat:			
minimum:	8 hours	6 hours	3 hours
maximum:	30 days	30 days	30 days
To cure:	7 days	7 days	7 days
Pot Life:	8 hrs	5½ hrs	3½ hrs

Drying time is temperature, humidity, and film thickness dependent.

Sweat-in-time: none required

Mix Ratio: 4:1

If maximum recoat time is exceeded, abrade surface before recoating.

Finish:

Eg-Shel	15-25 units @ 85°
Gloss	90+ units @ 60°

Flash Point:>200°F, SETA Flash, mixed

Shelf Life: 24 months, unopened
Store indoors at 40°F to 100°F.

Tinting with CCE:
at 100% strength. Five minutes minimum mixing on a mechanical shaker is required for complete mixing of color.

B73W311/B73V300
<50 g/L; <0.42 lb/gal
As per 40 CFR 59.406 and SOR/2009-264, s.12

Volume Solids (mixed): 41 ± 2%
Weight Solids (mixed): 50 ± 2%
Weight per Gallon (mixed): 9.97 lb

RECOMMENDED SYSTEMS

Steel and Galvanized Steel:
1ct. Pro Industrial Pro-Cryl Primer
1-2cts. Pro Industrial Water Based Epoxy
(For high performance aesthetics exterior:)
1ct. Pro Industrial Pro-Cryl Primer
1ct. Pro Industrial Water Based Epoxy
1-2cts. Pro Industrial Water Base Acrolon 100

Drywall Interior:
1ct. ProMar 200 Zero VOC Latex Primer
1-2 cts. Pro Industrial Water Based Epoxy

Concrete, Interior smooth:
1-2cts. Pro Industrial Water Based Epoxy
(For high performance aesthetics exterior:)
1ct. Pro Industrial Water Based Epoxy
1-2cts. Pro Industrial Water Base Acrolon 100

Concrete/Masonry:
1-2cts. Filler/Surfacer as required to fill voids and provide a continuous surface.
Suitable surfacers Interior/Exterior are:
Loxon Block Surfacer,
Pro Industrial Heavy Duty Block Filler,
Kem Cati-Coat HS Epoxy Filler
Cement-Plex 875
1-2cts. Pro Industrial Water Based Epoxy
(For high performance aesthetics exterior:)
1-2cts. Filler/Surfacer as required to fill voids and provide a continuous surface.
1ct Pro Industrial Water Based Epoxy
1-2cts. Pro Industrial Water Base Acrolon 100

Wood, Interior:
1ct. Premium Wall & Wood Primer
2cts. Pro Industrial Water Based Epoxy

System Tested: (unless otherwise indicated)
Substrate: Steel
Surface Preparation: SSPC-SP10
2 cts. Pro Industrial Waterborne Catalyzed Epoxy, Gloss, @ 2.0 - 4.0 mils dft/ct

Abrasion Resistance:
Method: ASTM D4060, CS17 wheel, 1000 cycles, 1 kg load
Result: 150 mg loss

Adhesion:
Method: ASTM D4541
Result: 550 psi

Corrosion Weathering:
Method: ASTM D5894, 15 cycles, 5040 hours
Result: Passes

Dry Heat Resistance:
Method: ASTM D2485
Result: 250°F

Flexibility:
Method: ASTM D522, 180° bend, 1/8" mandrel
Result: Passes

Impact Resistance, Direct:
Method: ASTM D2794
Result: 100 in. lb.

Impact Resistance, Indirect:
Method: ASTM D2794
Result: 80 in. lb.

Moisture Condensation Resistance:
Method: ASTM D4585, 100°F, 5000 hours
Result: Passes

Pencil Hardness:
Method: ASTM D3363
Result: H

Salt Fog Resistance:
Method: ASTM B117, 2000 hours
Result: Passes

WVP Perms (US) Gloss 2.0
grains/(hr ft^2 in Hg) Eg-Shel 5.0

continued on back

PRO INDUSTRIAL™ WATER BASED CATALYZED EPOXY

SHERWIN-WILLIAMS.

SURFACE PREPARATION

WARNING! Removal of old paint by sanding, scraping or other means may generate dust or fumes that contain lead. Exposure to lead dust or fumes may cause brain damage or other adverse health effects, especially in children or pregnant women. Controlling exposure to lead or other hazardous substances requires the use of proper protective equipment, such as a properly fitted respirator (**NIOSH** approved) and proper containment and cleanup. For more information, call the National Lead Information Center at **1-800-424-LEAD** (in US) or contact your local health authority.

Iron & Steel - Minimum surface preparation is Power Tool Clean per SSPC-SP3. Remove all oil and grease from surface by Solvent Cleaning per SSPC-SP1 (recommended preparation is Steam Cleaning). For better performance, use Commercial Blast Cleaning per SSPC-SP6/ NACE 3, blast clean all surfaces using a sharp, angular abrasive for optimum surface profile (2 mils). Prime any bare steel within 8 hours or before flash rusting occurs.

Aluminum - Remove all oil, grease, dirt, oxide and other foreign material per SSPC-SP1. Prime the area the same day as cleaned.

Galvanizing - Allow to weather a minimum of six months prior to coating. Solvent Clean per SSPC-SP1. When weathering is not possible, or the surface has been treated with chromates or silicates, first Solvent Clean per SSPC-SP1 and apply a test patch. Allow paint to dry at least one week before testing adhesion. If adhesion is poor, brush blasting per SSPC-SP16 is necessary to remove these treatments. Rusty galvanizing requires a minimum of Hand Tool Cleaning per SSPC-SP2, prime the area the same day as cleaned.

Concrete Block - Surface should be thoroughly clean and dry. Air, material and surface temperatures must be at least 50°F before filling. Use Heavy Duty Block Filler or Loxon Block Surfacer. The filler must be thoroughly dry before topcoating.
Masonry - All masonry must be free of dirt, oil, grease, loose paint, mortar, masonry dust, etc. Clean per SSPC-SP13/Nace 6/ ICRI No. 310.2R, CSP 1-3. Poured, troweled, or tilt-up concrete, plaster, mortar, etc. must be thoroughly cured at least 30 days at 75°F. Form release compounds and curing membranes must be removed by brush blasting. Brick must be allowed to weather for one year prior to surface preparation and painting. Prime the area the same day as cleaned. Weathered masonry and soft or porous cement board must be brush blasted or power tool cleaned to remove loosely adhering contamination and to get to a hard, firm surface. Apply one coat Loxon Conditioner, following label recommendations.

Wood - Surface must be clean, dry and sound. Prime with recommended primer. No painting should be done immediately after a rain or during foggy weather. Knots and pitch streaks must be scraped, sanded and spot primed before full coat of primer is applied. All nail holes or small openings must be properly caulked.

Previously Painted Surfaces - If in sound condition, clean the surface of all foreign material. Smooth, hard or glossy coatings and surfaces should be dulled by abrading the surface. Apply a test area, allowing paint to dry one week before testing adhesion. If adhesion is poor, additional abrasion of the surface and/or removal of the previous coating may be necessary. Retest surface for adhesion. If paint is peeling or badly weathered, clean surface to sound substrate and treat as a new surface as above. Recognize that any surface preparation short of total removal of the old coating may compromise the service length of the system.

APPLICATION PROCEDURES

Apply paint at the recommended film thickness and spreading rate as indicated on front page. Application of coating below minimum recommended spreading rate will adversely affect coating performance.

SAFETY PRECAUTIONS

Before using, carefully read **CAUTIONS** on label.
Refer to the Safety Data Sheets (SDSs) before use. **FOR PROFESSIONAL USE ONLY.**
Published technical data and instructions are subject to change without notice. Contact your Sherwin-Williams representative for additional technical data and instructions.

PERFORMANCE TIPS

No painting should be done immediately after a rain or during foggy weather.
Do not apply the material beyond recommended pot life.
All epoxies will chalk and fade when un-topcoated in exterior environments. Apply appropriate topcoat if aesthetics are required.
Do not mix previously catalyzed material with new.

APPLICATION

Temperature: 50°F minimum
100°F maximum
(Air, surface, and material)
At least 5°F above dew point
Relative humidity: 85% maximum

The following is a guide. Changes in pressures and tip sizes may be needed for proper spray characteristics. Always purge spray equipment before use with listed reducer. Any reduction must be compatible with the existing environmental and application conditions.

Reducer ..... Water

Airless Spray
Pressure..... 2000 psi
Hose..... 1/4" ID
Tip ..... .015" - .017"
Filter ..... 60 mesh
Reduction as needed up to 10% by volume

Conventional Spray
Gun .....DeVilbiss MBC-510
Fluid Tip ..... E
Air Nozzle.....704
Atomization Pressure.....40-60 psi
Fluid Pressure..... 10-20 psi
Reduction as needed up to 10% by volume
Brush .....Nylon/Polyester
Reduction..... Not recommended
Roller ..... 3/8" woven
Reduction..... Not recommended
If specific application equipment is listed above, equivalent equipment may be substituted.

CLEANUP INFORMATION

Clean spills, spatters, hands and tools immediately after use with soap and warm water. After cleaning, flush spray equipment with compliant cleanup solvent to prevent rusting of the equipment. Follow manufacturer's safety recommendations when using solvents.

HOTW 5/4/2016 B73W311/B73V300 01 00

KOR,FRC, SP

The information and recommendations set forth in this Product Data Sheet are based upon tests conducted by or on behalf of The Sherwin-Williams Company. Such information and recommendations set forth herein are subject to change and pertain to the product offered at the time of publication. Consult your Sherwin-Williams representative or visit www.paintdocs.com to obtain the most current version of the PDS and/or an SDS.